24-650 Applied Finite Element Analysis

Homework No 2

Static structural analysis of a plate with a hole

Ignacio Cordova

The objective of this assignment was to do a static structural analysis of a plate with a hole under different conditions in Ansys, and compare that to the theoretical solution known for a 2D plate under plane stress conditions ($\sigma_z = 0$) shown in Figure 1. The plate was created using SpaceClaim (Figure 2) and then imported to Ansys Workbench.

$$\sigma_{peak} = K_t \sigma_{norm}$$

$$\sigma_{norm} = \frac{W}{W-d}\sigma_\infty$$

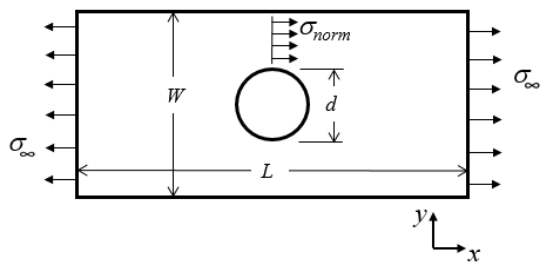

$$K_t = 3.00 - 3.14\left(\frac{d}{W}\right) + 3.667\left(\frac{d}{W}\right)^2 - 1.527\left(\frac{d}{W}\right)^3$$

Figure 1: Theoretical solution for a 2D plate under plane stress conditions

1. Setup

The first step was to create a new project in Ansys Workbench and set a Static Structural module. Using the default Engineering Data option, I started setting the conditions for the analysis.

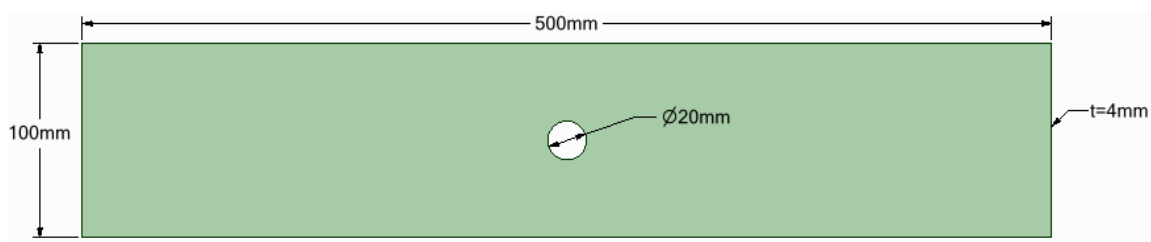

Figure 2: Plate dimensions (thickness=4 mm)

The **mesh** consisted of **10,524 nodes** and **1,427 elements (6 mm element size)**. This is shown in Figure 3.

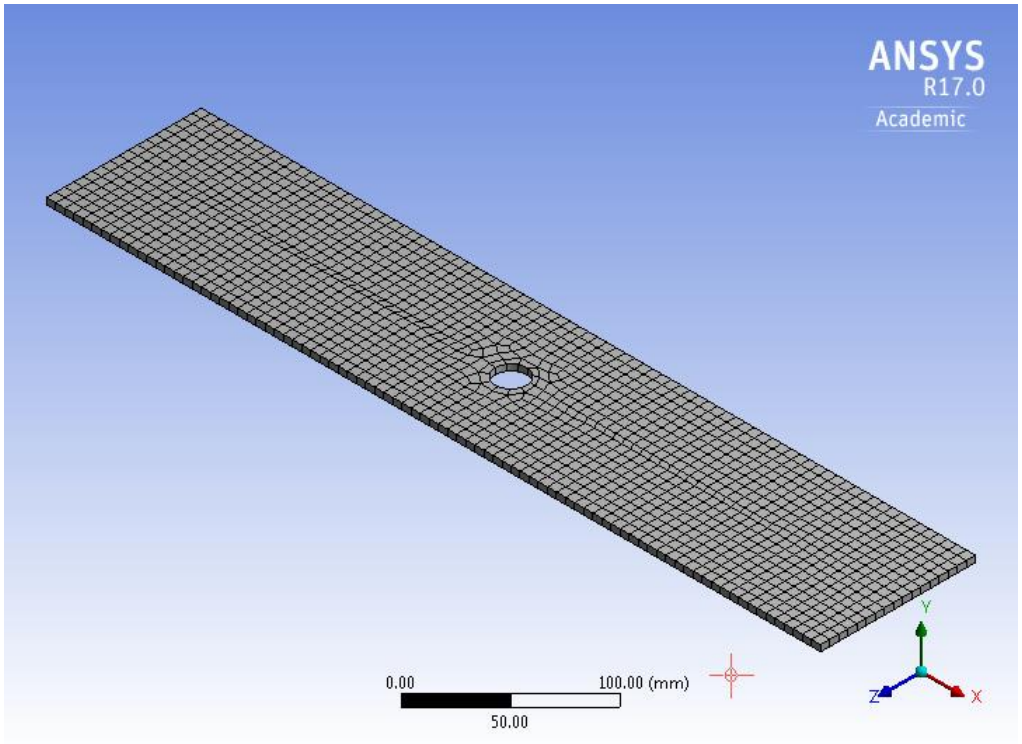

Figure 3: Mesh, Element Size= 6 mm (4 mm plate)

With the mesh ready, I applied a boundary condition:

- Pressure of $\mathbf{100}\ \boldsymbol{MPa}$ on both sides of the plate as shown in Figure A.1

Because I didn't constrain anything on the model, the plate becomes unstable. To avoid this problem, it is necessary to activate the **Weak Springs** function which creates small spring supports to make it capable of withstanding small external forces. With those conditions, the simulation was done for **Structural Steel**.

After that, a similar simulation was done for the same 4mm plate but now correctly constraining the geometry instead of using Weak Springs.

The final two simulations were exactly the same as the ones explained before but now using a plate with a thickness of 40 mm.

The results for the four simulations are shown in the next section.

2. Results and Analysis

After getting some preliminary results I noticed that I needed to refine the mesh around the middle hole because of some singularities. To do that I inserted the **Convergence** option to the Equivalent Stress results and I set that option to be a max of **4 refinement loops**, with a **refinement depth of 2** and an **allowable change of 1%.** The results are shown in the Figure A.2. There you can see that the maximum Equivalent Stress is **316.5 MPa** with a mesh of **44,581 elements** and **71,666 nodes** (shown in Figure A.3 and Figure A.4).

The same simulation but with correctly constrained geometry is shown in Figure A.5. There are 3 nodes that are constrained in the following way:

- BC A, Vertex Displacement: X=0 mm, Y=0 mm, Z=0 mm
- BC B, Vertex Displacement: X=Free, Y=0 mm, Z=0 mm
- BC E, Vertex Displacement: X=Free, Y=Free, Z=0 mm

With those boundary conditions, the plate is fully constrained and the simulation can be done.

Using the same Convergence option with the same parameters I got the results shown in Figure A.6, Figure A.7 and Figure A.8. You can see that the results are exactly the same for both methods, so now I can be sure that the correct maximum Equivalent Stress is **316.5 MPa** for the 4 mm plate.

If I repeat the same two simulations but now with a 40 mm plate I get the following results. First, a 6 mm element size mesh was used and it is shown in Figure 4.

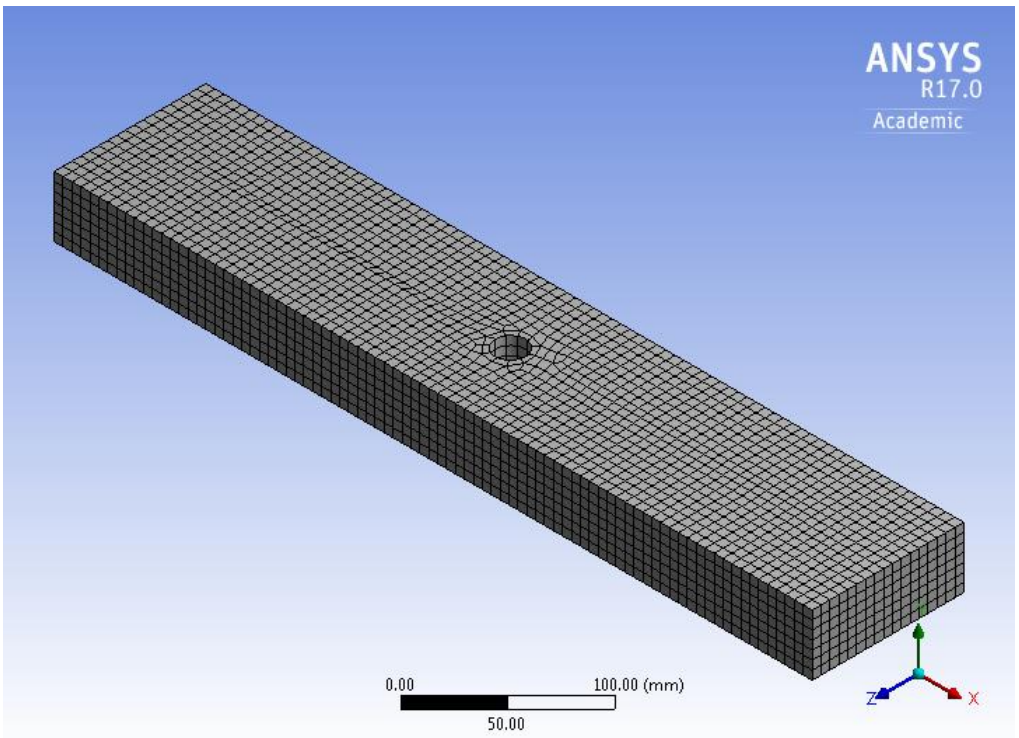

Figure 4: Mesh, Element Size= 6 mm (40 mm plate)

After repeating the same process I got a maximum Equivalent Stress of **306.14 MPa** with a mesh of **275,689 elements** and **397,039 nodes** (shown in Figure A.10, Figure A.11 and Figure A.12 for the Weak Springs case and Figure A.14, Figure A.15 and Figure A.16 for the vertex constraints case).

Finally, I calculated the theoretical solution using the equations shown in Figure 1.

$$K_t = 3.00 - 3.14\left(\frac{20\,mm}{100\,mm}\right) + 3.667\left(\frac{20\,mm}{100\,mm}\right)^2 - 1.527\left(\frac{20\,mm}{100\,mm}\right)^3 = 2.506$$

$$\sigma_{norm} = \left(\frac{100\ mm}{80\ mm}\right) 100\ MPa = 125\ MPa$$

$$\sigma_{peak} = 2.506\ \cdot 125\ MPa = 313.25\ MPa$$

All the results are shown in the table below.

Max Equivalent Stress	4 mm Plate	40 mm Plate	Theoretical
Weak Springs	316.5 MPa	306.14 MPa	313.25 MPa
Vertex Constraints	316.5 MPa	306.14 MPa	313.25 MPa

Table 1: Results summary

3. Conclusions

As can be seen on the results shown in Table 1, the 4 mm Plate has a maximum Equivalent Stress that is really close to the theoretical value (**1% difference**). This means that a plate with that geometry can be represented as a 2D object, so there is no need to do a simulation in Ansys if you can just solve a simple equation. Nevertheless, for a thicker plate, like the 40 mm one, the maximum Equivalent Stress differs by **2.26%,** and this value will increase if the plate becomes thicker and thicker. The reason that this happens is that the assumption of $\sigma_z = 0$ (or $\sigma_y = 0$ in our case) is no longer valid for those cases. As you can see in Figure A.17 and Figure A.18, the maximum normal stress in direction Y is very low (**2.65 MPa**) for the 4 mm plate but it is very high (**55.74 MPa**) for the 40 mm plate. Finally, it is important to mention that there are many ways to solve a problem in Ansys (using weak springs or any configuration for constraints). The important thing is to understand the physics behind the problem and especially understand the results obtained. Also, there are always going to be certain types of problems with simple geometries that can be solved by using theoretical equations with no need for using software like Ansys.

4. References

[1] B. McGinty, "Fracture Mechanics," 2 February 2017. [Online]. Available: http://www.fracturemechanics.org/hole.html.

5. Appendix

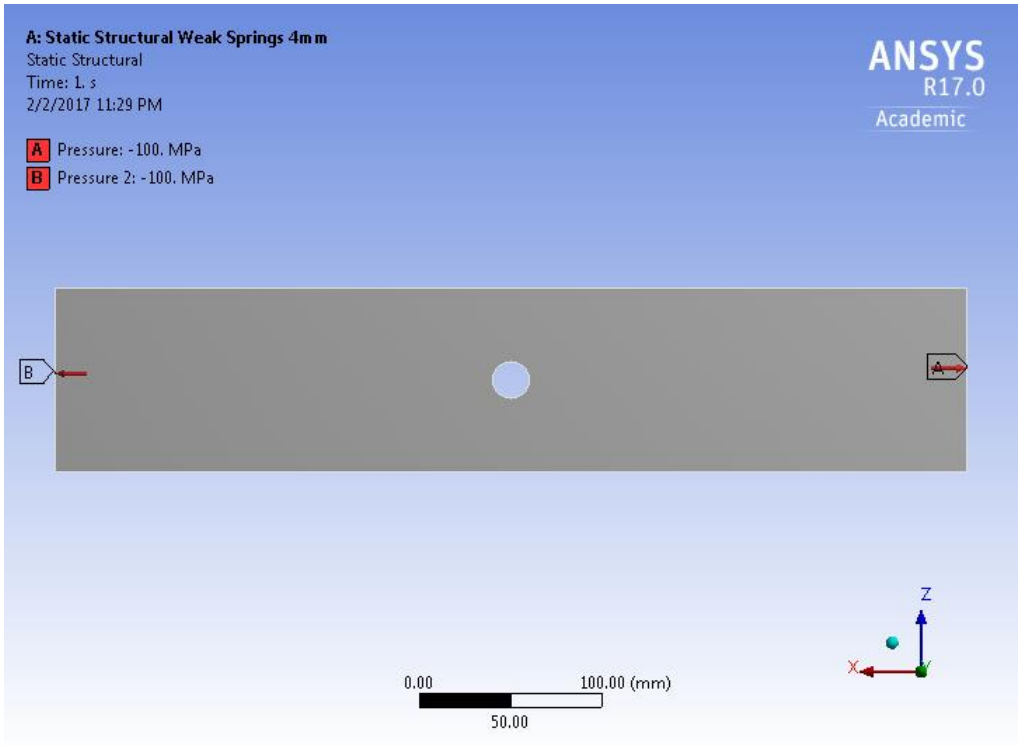

Figure A.1: Boundary Conditions for 4 mm Plate with Weak Springs

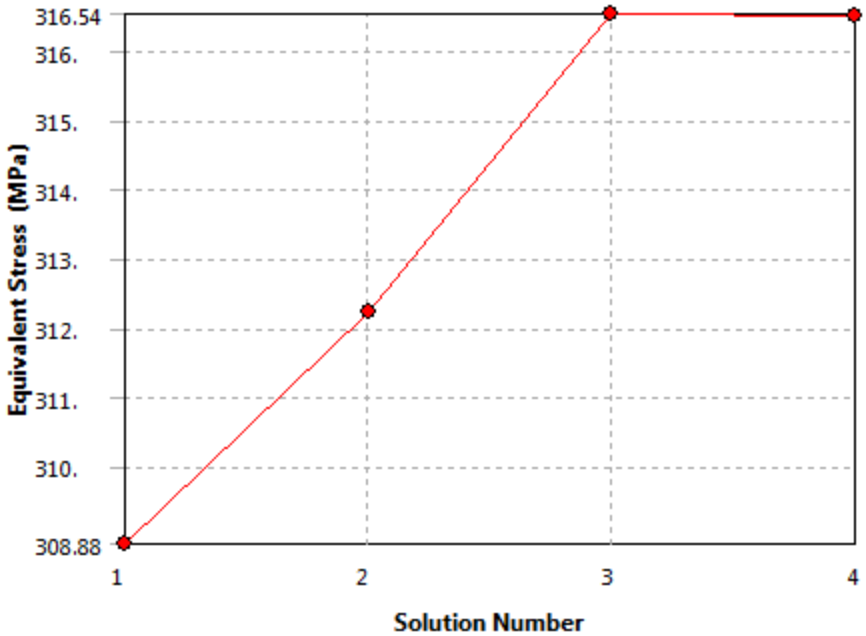

	Equivalent Stress (MPa)	Change (%)	Nodes	Elements
1	308.88		10524	1427
2	312.22	1.0762	24214	12496
3	316.54	1.3738	37995	21656
4	316.5	-1.1318e-002	71666	44581

Figure A.2: Equivalent (Von-Mises) Stress Convergence for 4 mm plate with Weak Springs

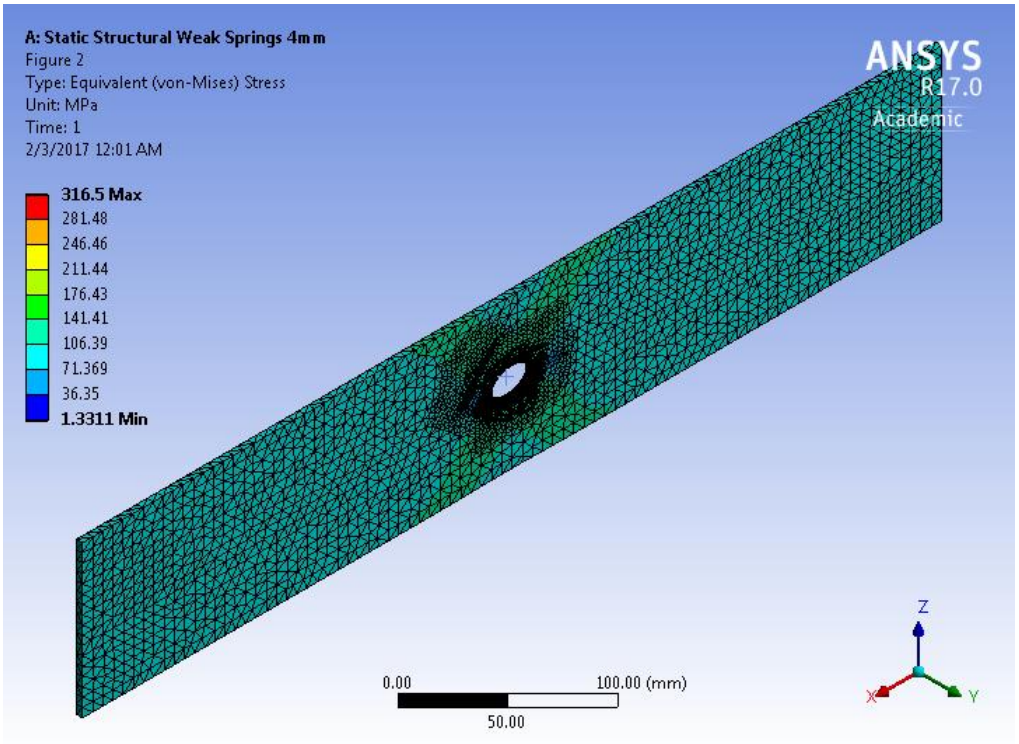

Figure A.3: Equivalent (Von-Mises) Stress for 4 mm plate with Weak Springs

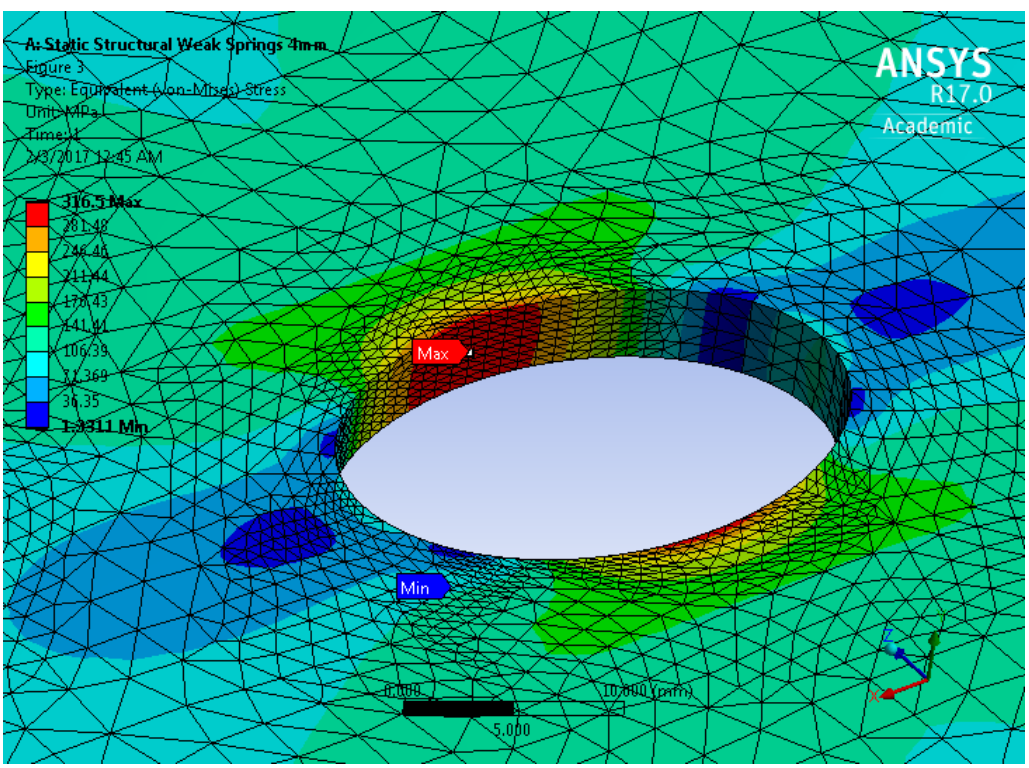

Figure A.4: Equivalent (Von-Mises) Stress for 4 mm plate with Weak Springs (Zoom)

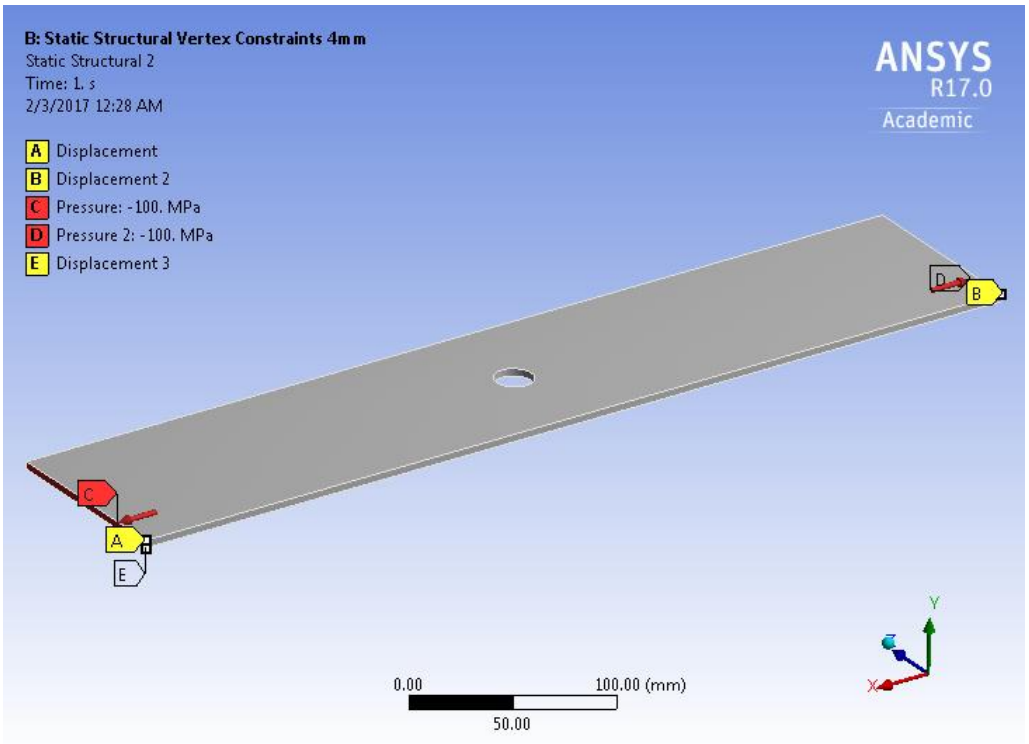

Figure A.5: Boundary Conditions for 4 mm Plate with vertex constraints

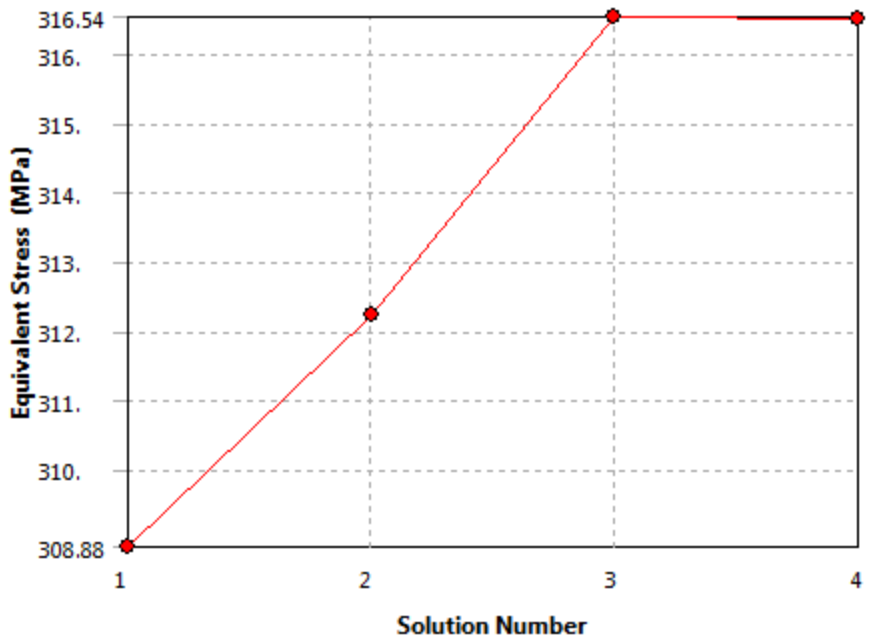

	Equivalent Stress (MPa)	Change (%)	Nodes	Elements
1	308.88		10524	1427
2	312.22	1.0762	24214	12496
3	316.54	1.3738	37995	21656
4	316.5	-1.1318e-002	71666	44581

Figure A.6: Equivalent (Von-Mises) Stress Convergence for 4 mm plate with vertex constraints

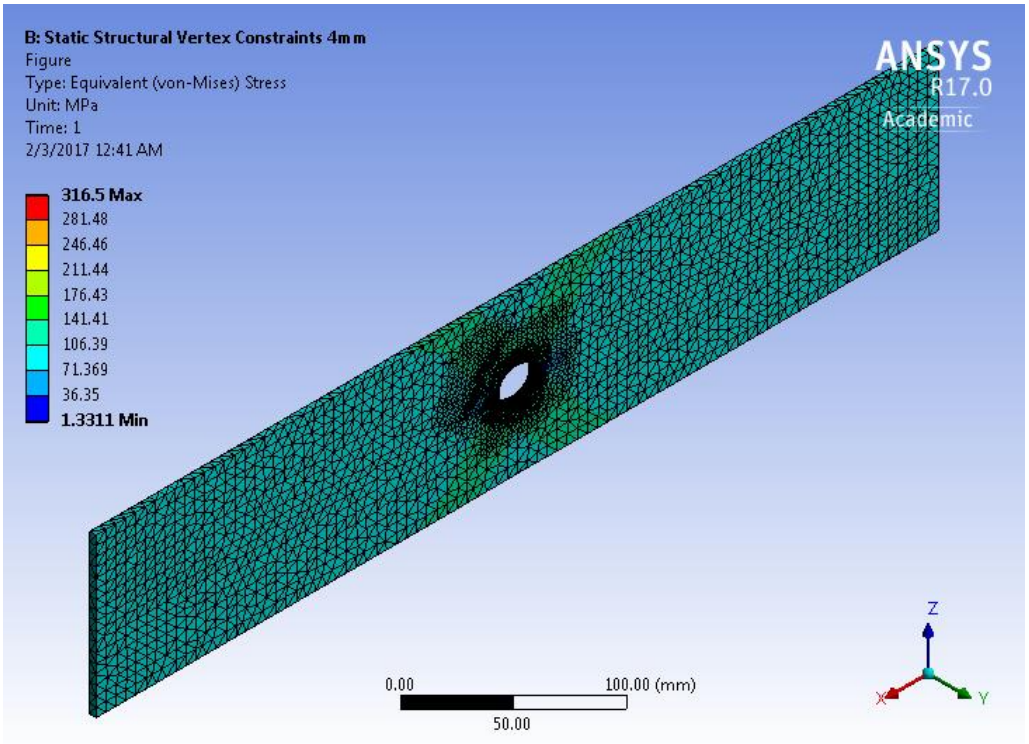

Figure A.7: Equivalent (Von-Mises) Stress for 4 mm plate with vertex constraints

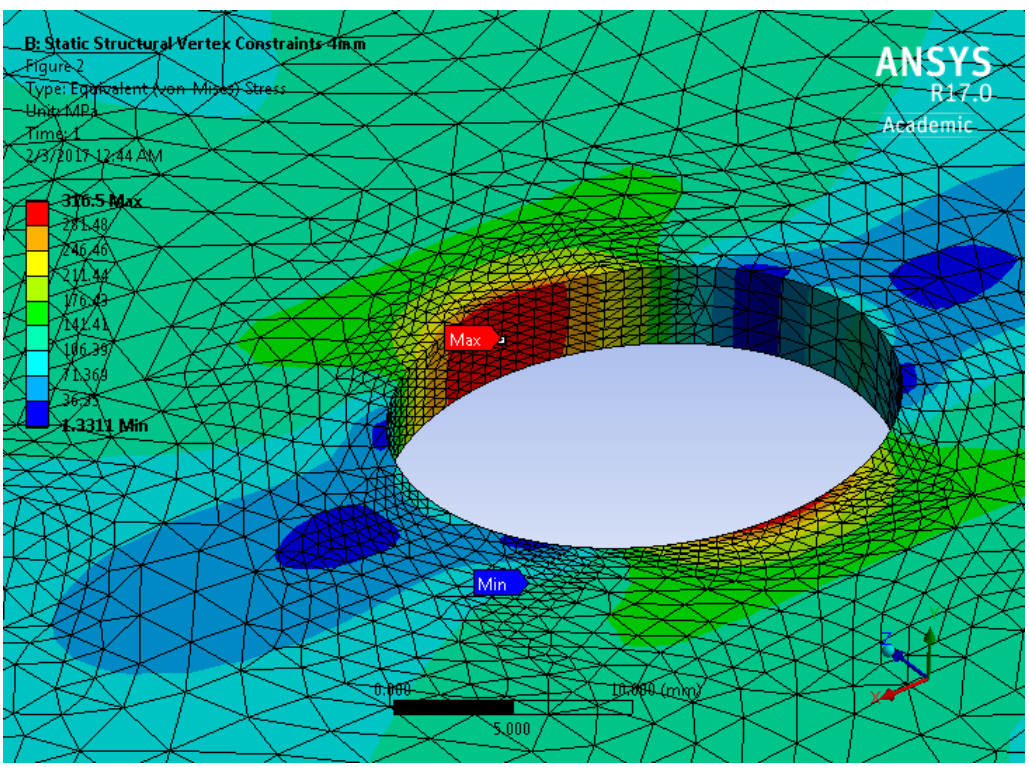

Figure A.8: Equivalent (Von-Mises) Stress for 4 mm plate with vertex constraints (Zoom)

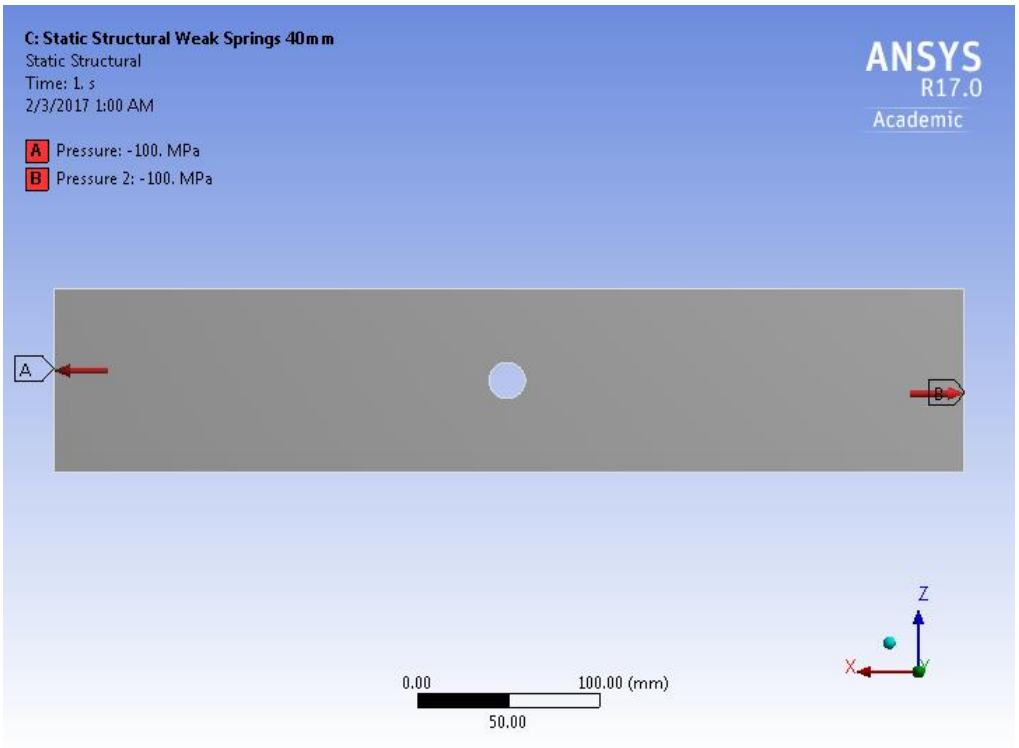

Figure A.9: Boundary Conditions for 40 mm Plate with Weak Springs

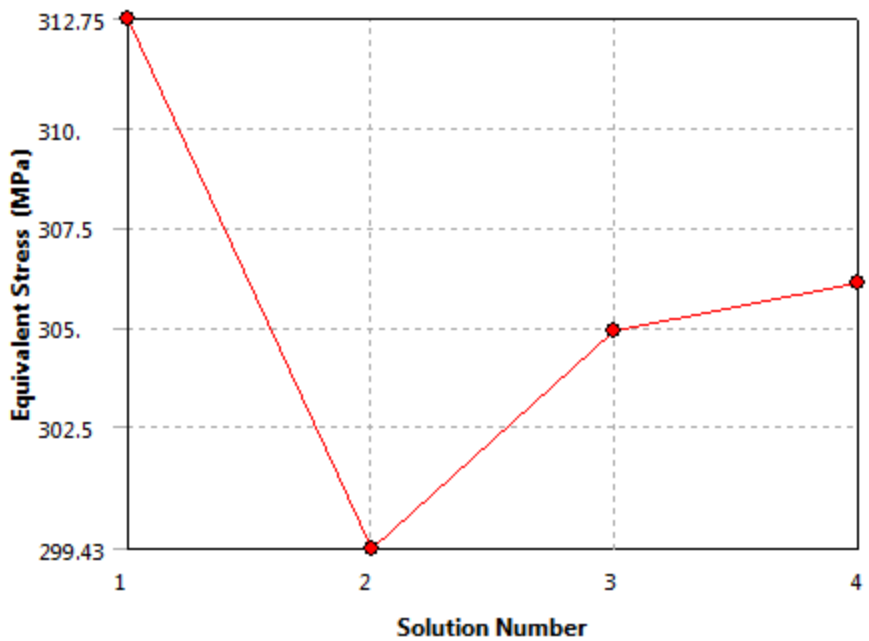

	Equivalent Stress (MPa)	Change (%)	Nodes	Elements
1	312.75		46760	10003
2	299.43	-4.35	37216	19566
3	304.93	1.8205	137503	86380
4	306.14	0.39604	397039	275689

Figure A.10: Equivalent (Von-Mises) Stress Convergence for 40 mm plate with Weak Springs

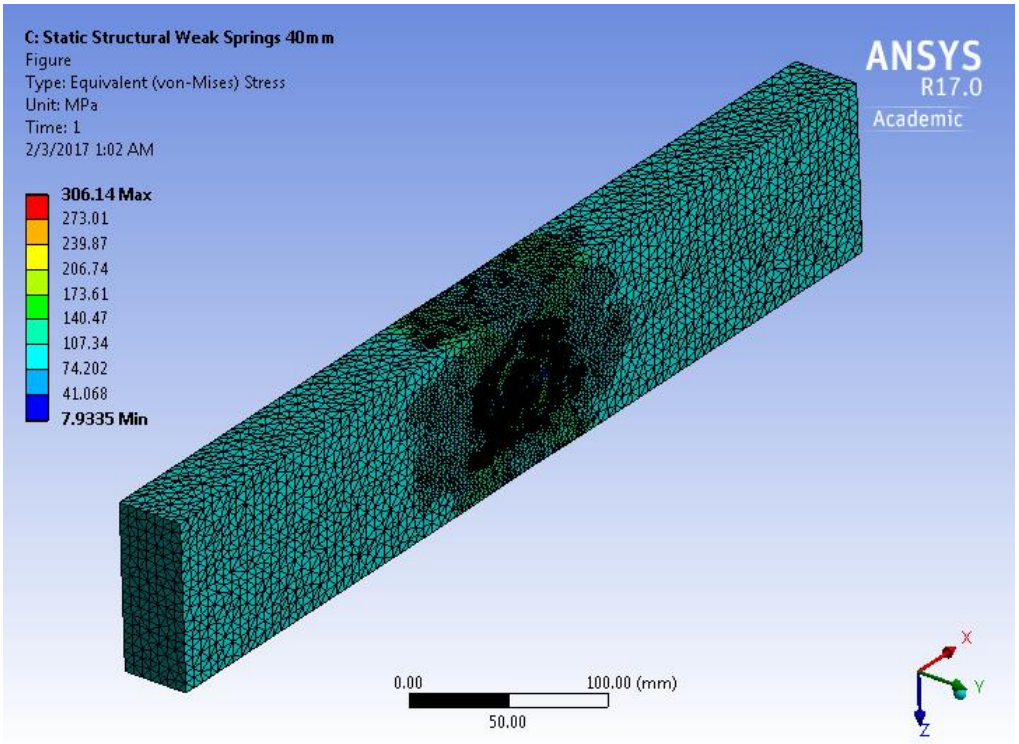

Figure A.11: Equivalent (Von-Mises) Stress for 40 mm plate with Weak Springs

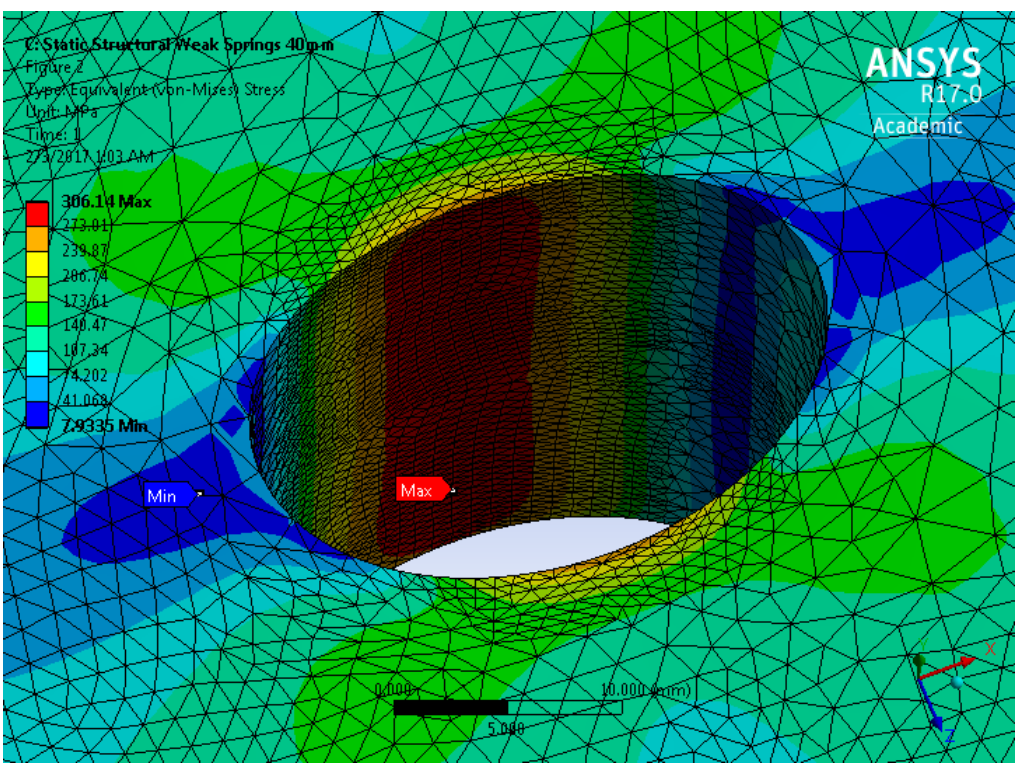

Figure A.12: Equivalent (Von-Mises) Stress for 40 mm plate with Weak Springs (Zoom)

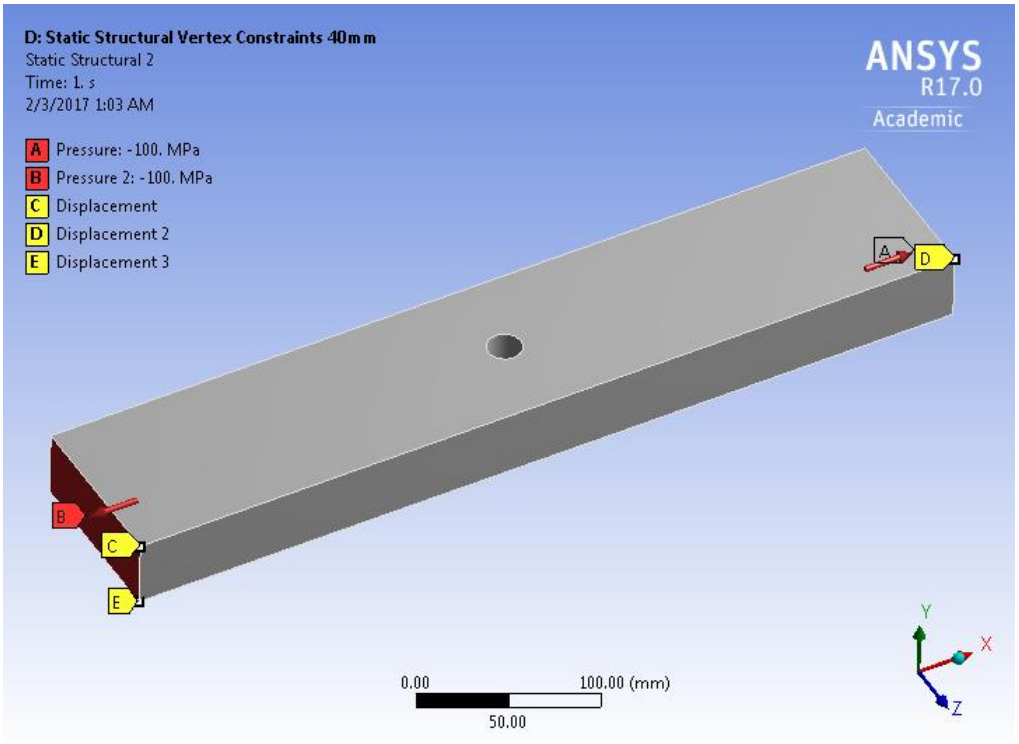

Figure A.13: Boundary Conditions for 40 mm Plate with vertex constraints

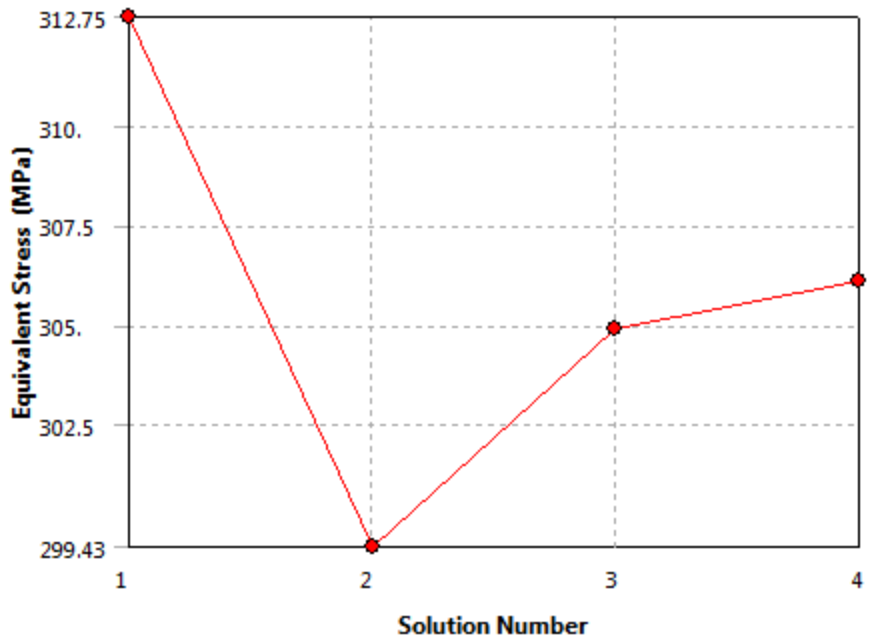

	Equivalent Stress (MPa)	Change (%)	Nodes	Elements
1	312.75		46760	10003
2	299.43	-4.35	37216	19566
3	304.93	1.8205	137503	86380
4	306.14	0.39604	397039	275689

Figure A.14: Equivalent (Von-Mises) Stress Convergence for 40 mm plate with vertex constraints

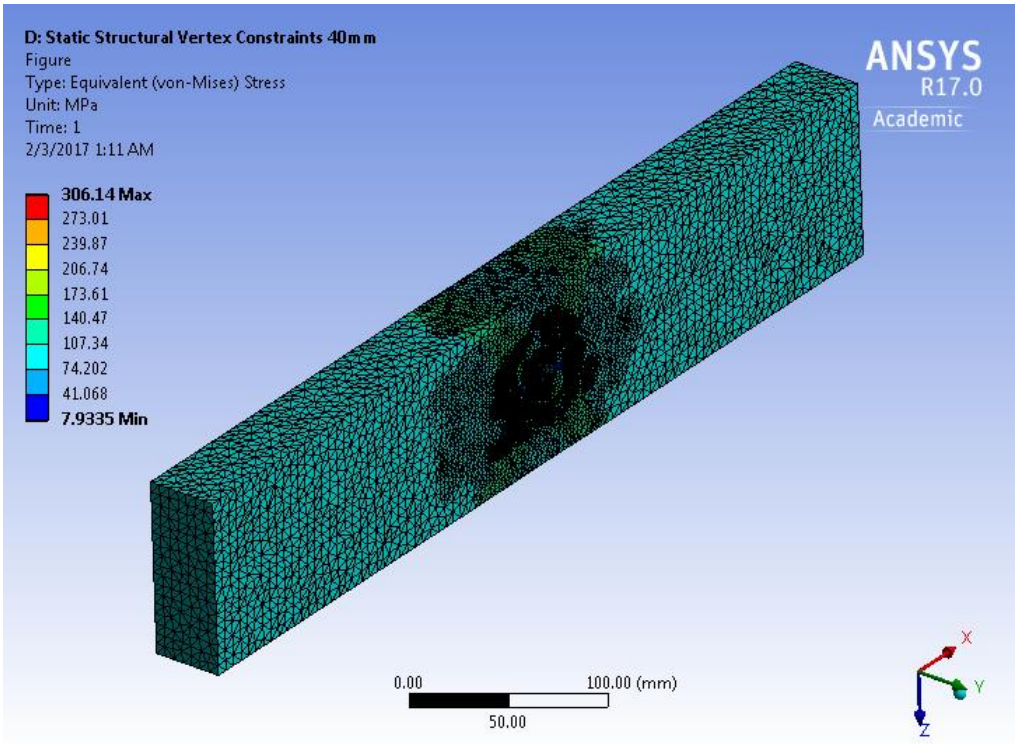

Figure A.15: Equivalent (Von-Mises) Stress for 40 mm plate with vertex constraints

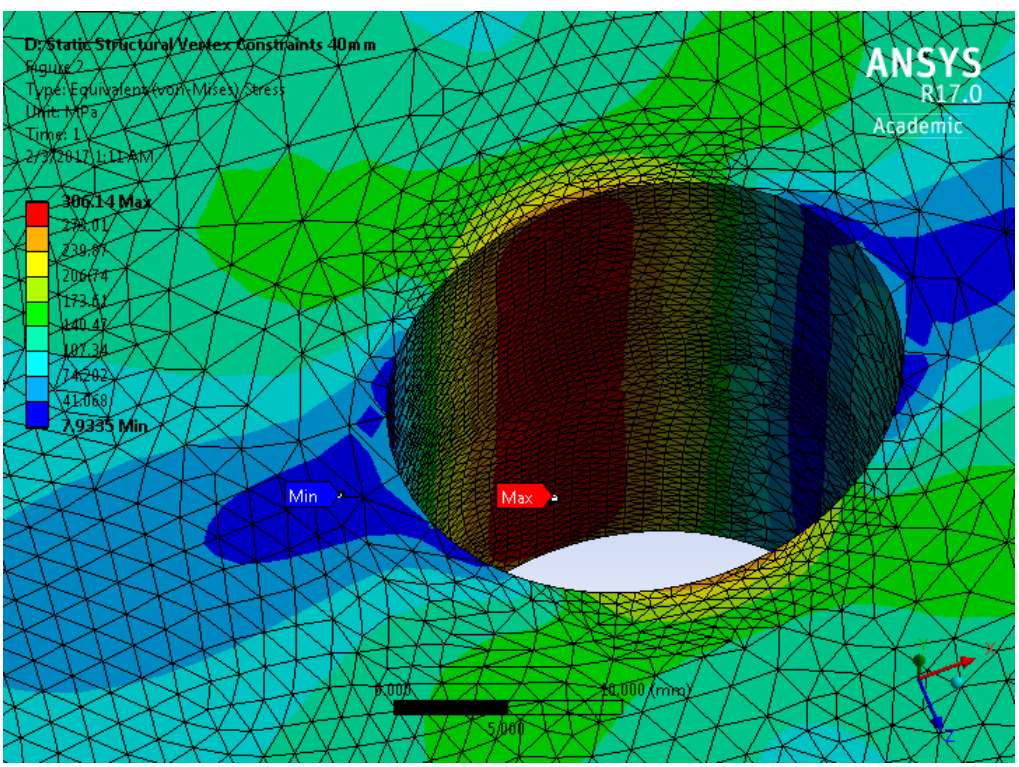

Figure A.16: Equivalent (Von-Mises) Stress for 40 mm plate with vertex constraints (Zoom)

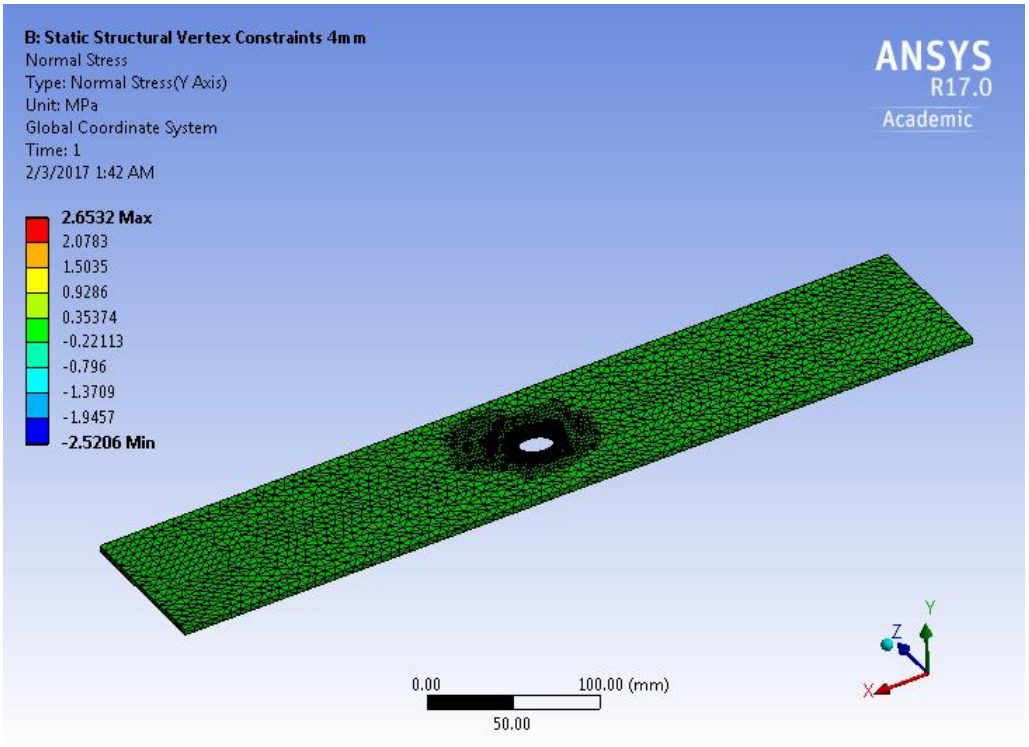

Figure A.17: Normal Stress (Y axis) for a 4 mm plate

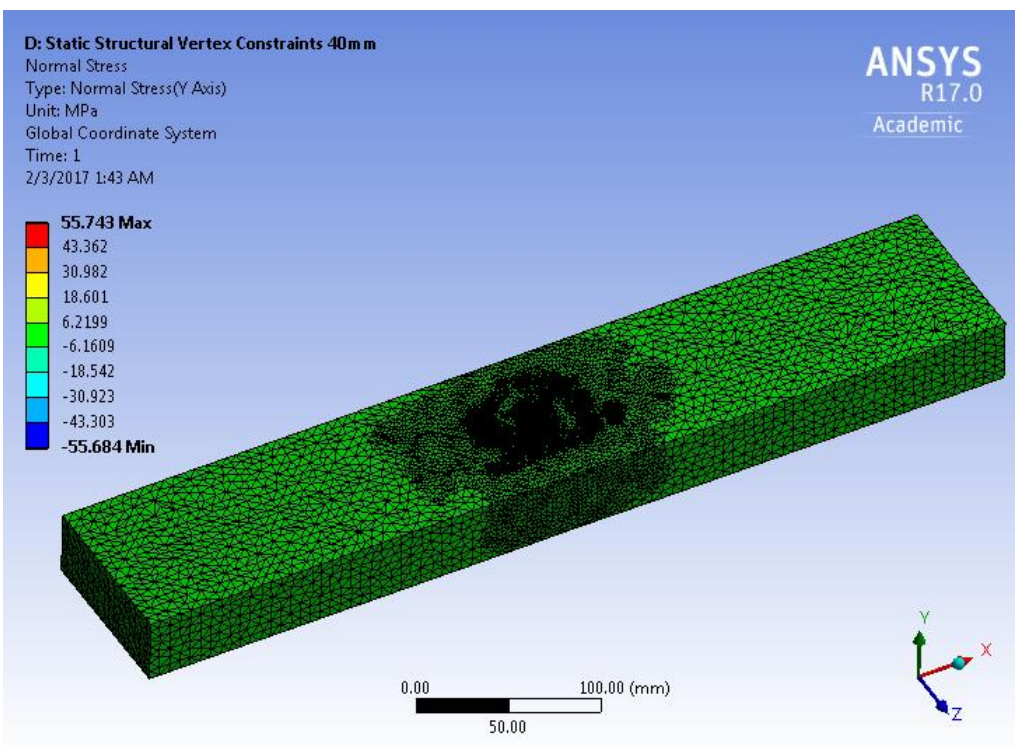

Figure A.18: Normal Stress (Y axis) for a 40 mm plate